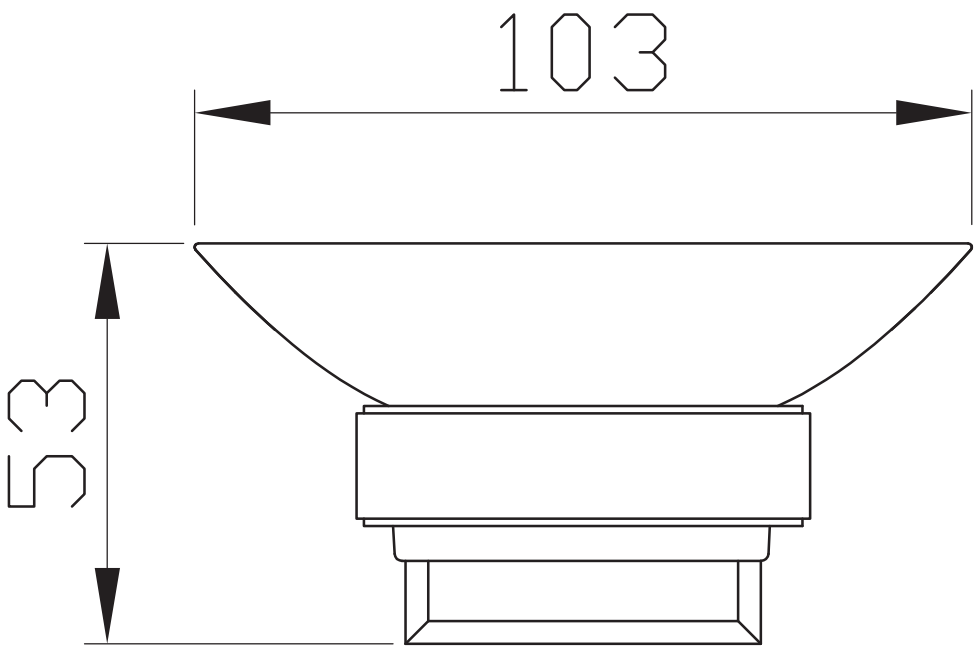
103
53

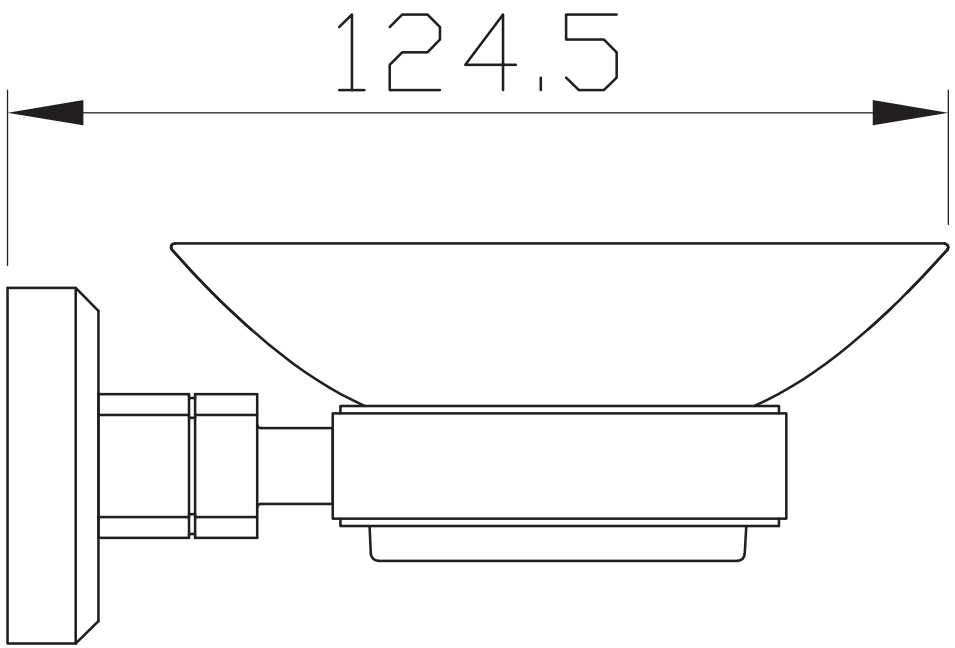
124.5